Cambridge International AS & A Level

Cambridge Assessment International Education
Cambridge International Advanced Subsidiary and Advanced Level

CANDIDATE NAME

CENTRE NUMBER

CANDIDATE NUMBER

5954088864

PHYSICS **9702/22**

Paper 2 AS Level Structured Questions **October/November 2019**

1 hour 15 minutes

Candidates answer on the Question Paper.

No Additional Materials are required.

READ THESE INSTRUCTIONS FIRST

Write your centre number, candidate number and name on all the work you hand in.
Write in dark blue or black pen.
You may use an HB pencil for any diagrams or graphs.
Do not use staples, paper clips, glue or correction fluid.
DO **NOT** WRITE IN ANY BARCODES.

Answer **all** questions.

Electronic calculators may be used.
You may lose marks if you do not show your working or if you do not use appropriate units.

At the end of the examination, fasten all your work securely together.
The number of marks is given in brackets [ ] at the end of each question or part question.

This document consists of **15** printed pages and **1** blank page.

DC (KS/TP) 164216/3
© UCLES 2019

Cambridge Assessment International Education

[Turn over

Data

speed of light in free space	$c = 3.00 \times 10^{8}\,\text{m s}^{-1}$
permeability of free space	$\mu_0 = 4\pi \times 10^{-7}\,\text{H m}^{-1}$
permittivity of free space	$\varepsilon_0 = 8.85 \times 10^{-12}\,\text{F m}^{-1}$
	$(\frac{1}{4\pi\varepsilon_0} = 8.99 \times 10^{9}\,\text{m F}^{-1})$
elementary charge	$e = 1.60 \times 10^{-19}\,\text{C}$
the Planck constant	$h = 6.63 \times 10^{-34}\,\text{J s}$
unified atomic mass unit	$1\,\text{u} = 1.66 \times 10^{-27}\,\text{kg}$
rest mass of electron	$m_e = 9.11 \times 10^{-31}\,\text{kg}$
rest mass of proton	$m_p = 1.67 \times 10^{-27}\,\text{kg}$
molar gas constant	$R = 8.31\,\text{J K}^{-1}\,\text{mol}^{-1}$
the Avogadro constant	$N_A = 6.02 \times 10^{23}\,\text{mol}^{-1}$
the Boltzmann constant	$k = 1.38 \times 10^{-23}\,\text{J K}^{-1}$
gravitational constant	$G = 6.67 \times 10^{-11}\,\text{N m}^2\,\text{kg}^{-2}$
acceleration of free fall	$g = 9.81\,\text{m s}^{-2}$

© UCLES 2019

Formulae

uniformly accelerated motion	$s = ut + \frac{1}{2}at^2$ $v^2 = u^2 + 2as$
work done on/by a gas	$W = p\Delta V$
gravitational potential	$\phi = -\frac{Gm}{r}$
hydrostatic pressure	$p = \rho gh$
pressure of an ideal gas	$p = \frac{1}{3}\frac{Nm}{V}\langle c^2 \rangle$
simple harmonic motion	$a = -\omega^2 x$
velocity of particle in s.h.m.	$v = v_0 \cos \omega t$ $v = \pm \omega \sqrt{(x_0^2 - x^2)}$
Doppler effect	$f_o = \frac{f_s v}{v \pm v_s}$
electric potential	$V = \frac{Q}{4\pi\varepsilon_0 r}$
capacitors in series	$1/C = 1/C_1 + 1/C_2 + \ldots$
capacitors in parallel	$C = C_1 + C_2 + \ldots$
energy of charged capacitor	$W = \frac{1}{2}QV$
electric current	$I = Anvq$
resistors in series	$R = R_1 + R_2 + \ldots$
resistors in parallel	$1/R = 1/R_1 + 1/R_2 + \ldots$
Hall voltage	$V_H = \frac{BI}{ntq}$
alternating current/voltage	$x = x_0 \sin \omega t$
radioactive decay	$x = x_0 \exp(-\lambda t)$
decay constant	$\lambda = \frac{0.693}{t_{\frac{1}{2}}}$

© UCLES 2019

[Turn over

BLANK PAGE

© UCLES 2019

Answer **all** the questions in the spaces provided.

1 **(a)** Distinguish between vector and scalar quantities.

.....

.....

..... [2]

(b) The electric field strength E at a distance x from an isolated point charge Q is given by the equation

$$E = \frac{Q}{x^2 b}$$

where b is a constant.

(i) Use the definition of electric field strength to show that E has SI base units of $kg\,m\,A^{-1}\,s^{-3}$.

[2]

(ii) Use the units for E given in **(b)(i)** to determine the SI base units of b.

SI base units of b ..... [2]

[Total: 6]

2 **(a)** Define *acceleration*.

..... [1]

(b) A steel ball of diameter 0.080 m is released from rest and falls vertically in air, as illustrated in Fig. 2.1.

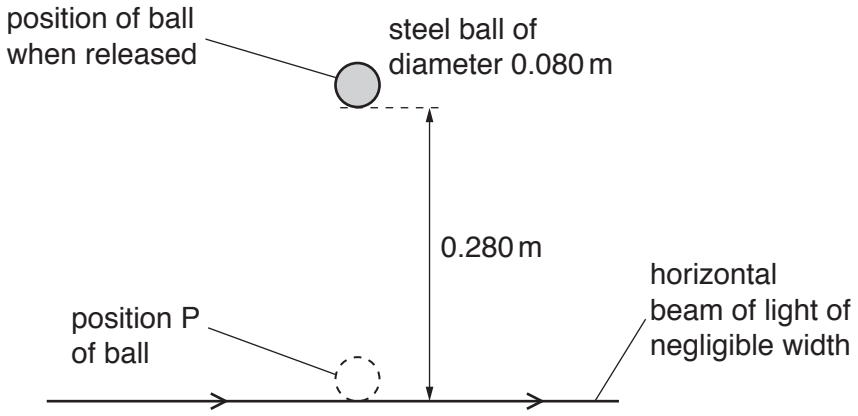

Fig. 2.1 (not to scale)

A horizontal beam of light of negligible width is a vertical distance of 0.280 m below the bottom of the ball when it is released. The ball falls through and breaks the beam of light.

(i) Explain why the force due to air resistance acting on the ball may be neglected when calculating the time taken for the ball to reach the beam of light.

.....

..... [1]

(ii) Calculate the time taken for the ball to fall from rest to position P where the bottom of the ball touches the beam of light.

time taken = ... s [2]

© UCLES 2019

(iii) Determine the time interval during which the beam of light is broken by the ball.

time interval = ... s [2]

(c) A different ball is released from the same position as the steel ball in **(b)**. This ball has the same diameter but a much lower density. For this ball, the force due to air resistance cannot be neglected as the ball falls.

State and explain the change, if any, to the time interval during which the beam of light is broken by the ball.

.....

.....

.....

..... [2]

[Total: 8]

3 **(a)** State Newton's third law of motion.

.....

.....

..... [2]

(b) A block X of mass m_X slides in a straight line along a horizontal frictionless surface, as shown in Fig. 3.1.

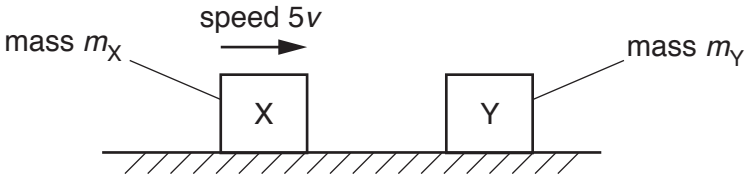

Fig. 3.1

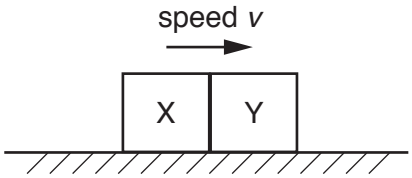

Fig. 3.2

The block X, moving with speed $5v$, collides head-on with a stationary block Y of mass m_Y. The two blocks stick together and then move with common speed v, as shown in Fig. 3.2.

(i) Use conservation of momentum to show that the ratio $\frac{m_Y}{m_x}$ is equal to 4.

[2]

(ii) Calculate the ratio

$$\frac{\text{total kinetic energy of X and Y after collision}}{\text{total kinetic energy of X and Y before collision}}.$$

ratio = ... [3]

© UCLES 2019

(iii) State the value of the ratio in **(ii)** for a perfectly elastic collision.

ratio = ... [1]

(c) The variation with time t of the momentum of block X in **(b)** is shown in Fig. 3.3.

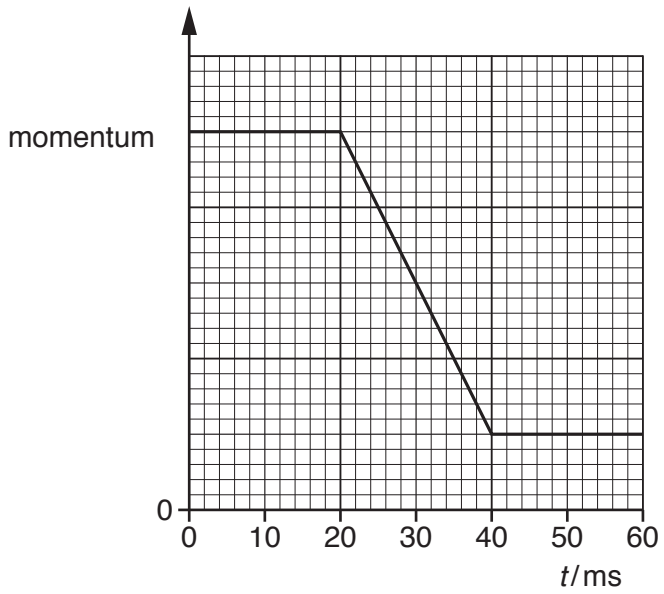

Fig. 3.3

Block X makes contact with block Y at time $t = 20$ ms.

(i) Describe, qualitatively, the magnitude and direction of the resultant force, if any, acting on block X in the time interval:

1. $t = 0$ to $t = 20$ ms

.....

2. $t = 20$ ms to $t = 40$ ms.

.....

.....

[3]

(ii) On Fig. 3.3, sketch the variation of the momentum of block Y with time t from $t = 0$ to $t = 60$ ms. [3]

[Total: 14]

© UCLES 2019

[Turn over

4 **(a)** A sphere in a liquid accelerates vertically downwards from rest. For the viscous force acting on the moving sphere, state:

(i) the direction

..... [1]

(ii) the variation, if any, in the magnitude.

..... [1]

(b) A man of weight 750 N stands a distance of 3.6 m from end D of a horizontal uniform beam AD, as shown in Fig. 4.1.

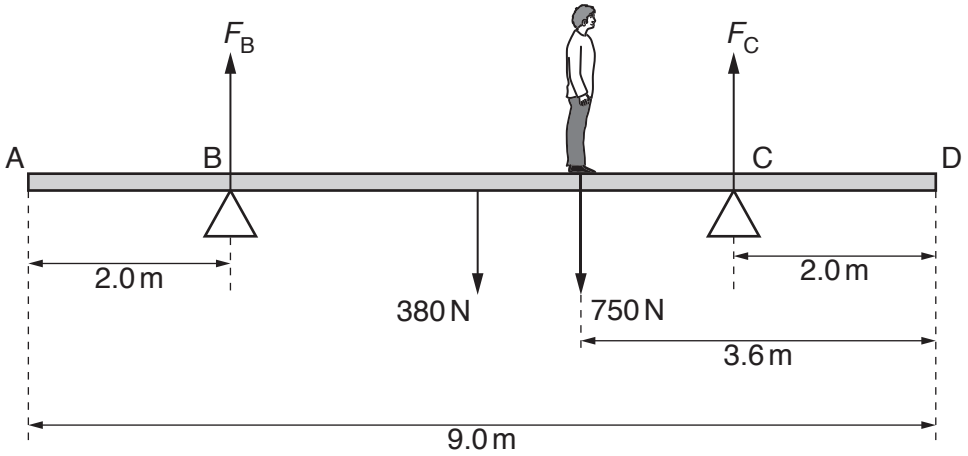

Fig. 4.1 (not to scale)

The beam has a weight of 380 N and a length of 9.0 m. The beam is supported by a vertical force F_B at pivot B and a vertical force F_C at pivot C. Pivot B is a distance of 2.0 m from end A and pivot C is a distance of 2.0 m from end D. The beam is in equilibrium.

(i) State the principle of moments.

.....

.....

..... [2]

© UCLES 2019

(ii) By using moments about pivot C, calculate F_B.

F_B = ... N [2]

(iii) The man walks towards end D. The beam is about to tip when F_B becomes zero.

Determine the minimum distance x from end D that the man can stand without tipping the beam.

x = ... m [2]

[Total: 8]

5 **(a)** State what is meant by the *wavelength* of a progressive wave.

.....

..... [1]

(b) A cathode-ray oscilloscope (CRO) is used to analyse a sound wave. The screen of the CRO is shown in Fig. 5.1.

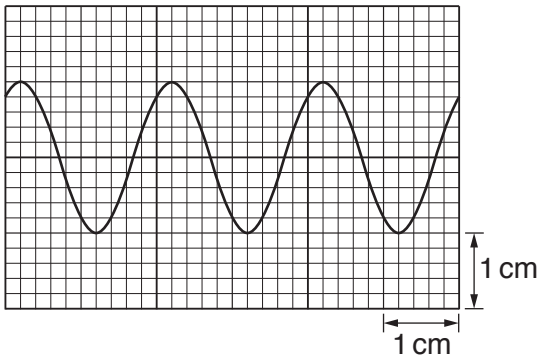

Fig. 5.1

The time-base setting of the CRO is 2.5 ms cm^{-1}.

Determine the frequency of the sound wave.

frequency = ... Hz [2]

© UCLES 2019

(c) The source emitting the sound in **(b)** is at point A. Waves travel from the source to point C along two different paths, AC and ABC, as shown in Fig. 5.2.

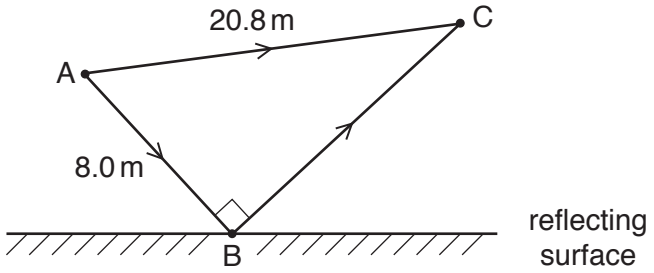

Fig. 5.2 (not to scale)

Distance AB is 8.0 m and distance AC is 20.8 m. Angle ABC is 90°. Assume that there is no phase change of the sound wave due to the reflection at point B. The wavelength of the waves is 1.6 m.

(i) Show that the waves meeting at C have a path difference of 6.4 m.

[1]

(ii) Explain why an intensity maximum is detected at point C.

.....

.....

..... [2]

(iii) Determine the difference between the times taken for the sound to travel from the source to point C along the two different paths.

time difference = ... s [2]

(iv) The wavelength of the sound is gradually increased. Calculate the wavelength of the sound when an intensity maximum is next detected at point C.

wavelength = ... m [1]

[Total: 9]

© UCLES 2019

[Turn over

6 **(a)** State Kirchhoff's first law.

.....

..... [1]

(b) The variations with potential difference V of the current I for a resistor X and for a semiconductor diode are shown in Fig. 6.1.

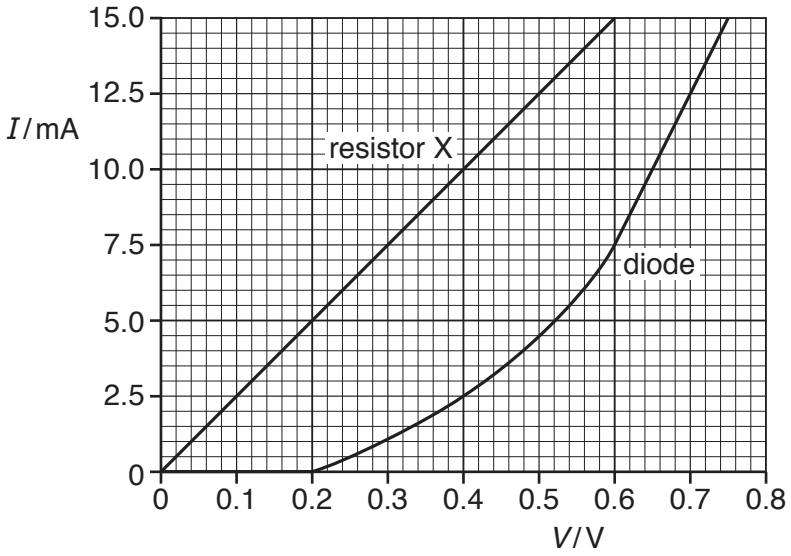

Fig. 6.1

(i) Determine the resistance of the diode for a potential difference V of 0.60 V.

resistance = ... Ω [3]

(ii) Describe, qualitatively, the variation of the resistance of the diode as V increases from 0.60 V to 0.75 V.

..... [1]

© UCLES 2019

(c) The diode and the resistor X in **(b)** are connected into the circuit shown in Fig. 6.2.

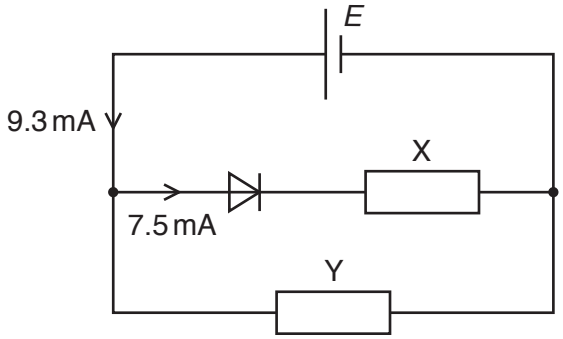

Fig. 6.2

The cell has electromotive force (e.m.f.) *E* and negligible internal resistance. Resistor Y is connected in parallel with resistor X and the diode. The current in the cell is 9.3 mA and the current in the diode is 7.5 mA.

(i) Use Fig. 6.1 to determine *E*.

E = ...V [1]

(ii) Determine the resistance of resistor Y.

resistance = ... Ω [2]

(iii) Calculate the power dissipated in the diode.

power = ...W [2]

(iv) The cell is now replaced by a new cell of e.m.f. 0.50 V and negligible internal resistance. Use Fig. 6.1 to determine the new current in the diode.

current = ...mA [1]

[Total: 11]

© UCLES 2019

[Turn over

7 A nucleus of plutonium-238 ($^{238}_{94}$Pu) decays by emitting an α-particle to produce a new nucleus X and 5.6 MeV of energy. The decay is represented by

$$^{238}_{94}\text{Pu} \longrightarrow \text{X} + \alpha + 5.6\,\text{MeV}.$$

(a) Determine the number of protons and the number of neutrons in nucleus X.

number of protons = ...

number of neutrons = ...
[2]

(b) Calculate the number of plutonium-238 nuclei that must decay in a time of 1.0 s to produce a power of 0.15 W.

number = ... [2]

[Total: 4]

Permission to reproduce items where third-party owned material protected by copyright is included has been sought and cleared where possible. Every reasonable effort has been made by the publisher (UCLES) to trace copyright holders, but if any items requiring clearance have unwittingly been included, the publisher will be pleased to make amends at the earliest possible opportunity.

To avoid the issue of disclosure of answer-related information to candidates, all copyright acknowledgements are reproduced online in the Cambridge Assessment International Education Copyright Acknowledgements Booklet. This is produced for each series of examinations and is freely available to download at www.cambridgeinternational.org after the live examination series.

Cambridge Assessment International Education is part of the Cambridge Assessment Group. Cambridge Assessment is the brand name of the University of Cambridge Local Examinations Syndicate (UCLES), which itself is a department of the University of Cambridge.

© UCLES 2019